9-ID Kohzu Monochromator Assembly

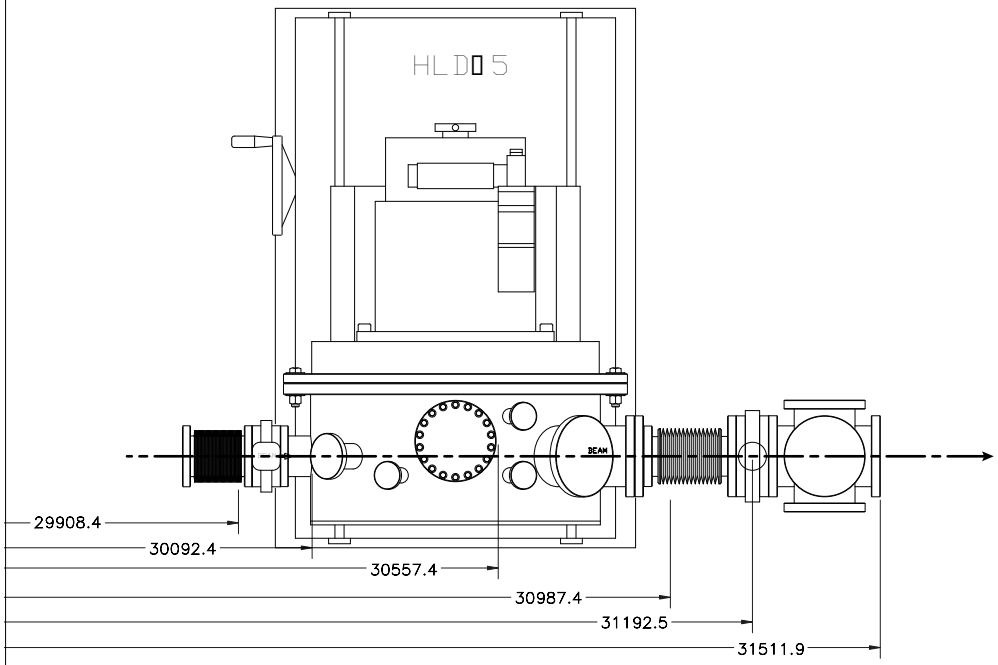

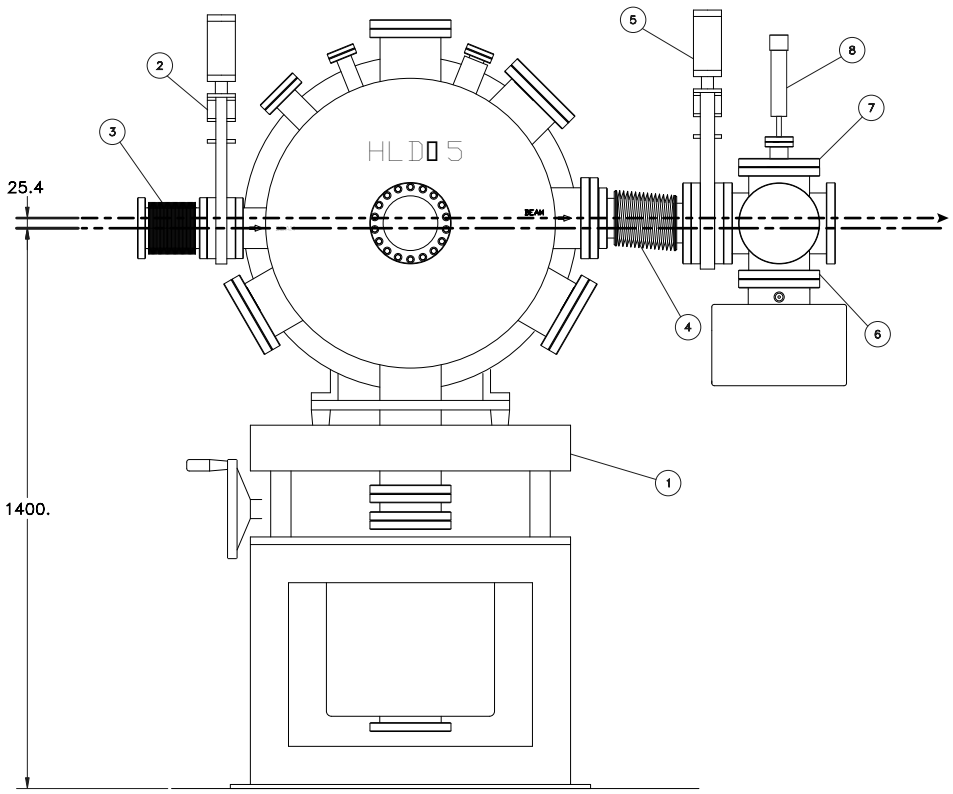

Item	Designator	Description	Vendor	Dwg./Part No.	P.O. #
8		LINEAR FEEDTHROUGH	MDC	#660010-03	CMC-50255
7		REDUCER NIPPLE	MDC	#402016	CMC-50255
6	SP108	6-WAY CROSS	A & N CORP.	#800-600-6X	CMC-50253
5	IV109	GATE VALVE	VAT		
4	BEL108-2	WELDED BELLOWS 8"-8"	STD. BELLOWS		
3	BEL108-1	WELDED BELLOWS 6"-6"	A & N CORP.	#600-F	CMC-50282
2	IV108	GATE VALVE	VAT		
1		KOHZU-MONOCHROMATOR	KOHZU		

CMC-CAT

DESIGN
R.C. Hewitt
R. Krakora
T. Gog 630 252 0320

9-ID PRIMARY BEAMLINE
SECTION 108

KOHZU ASSEMBLY

SCALE

MATERIAL

DATE 03/02/99

SHEET of

DWG P1DIS108