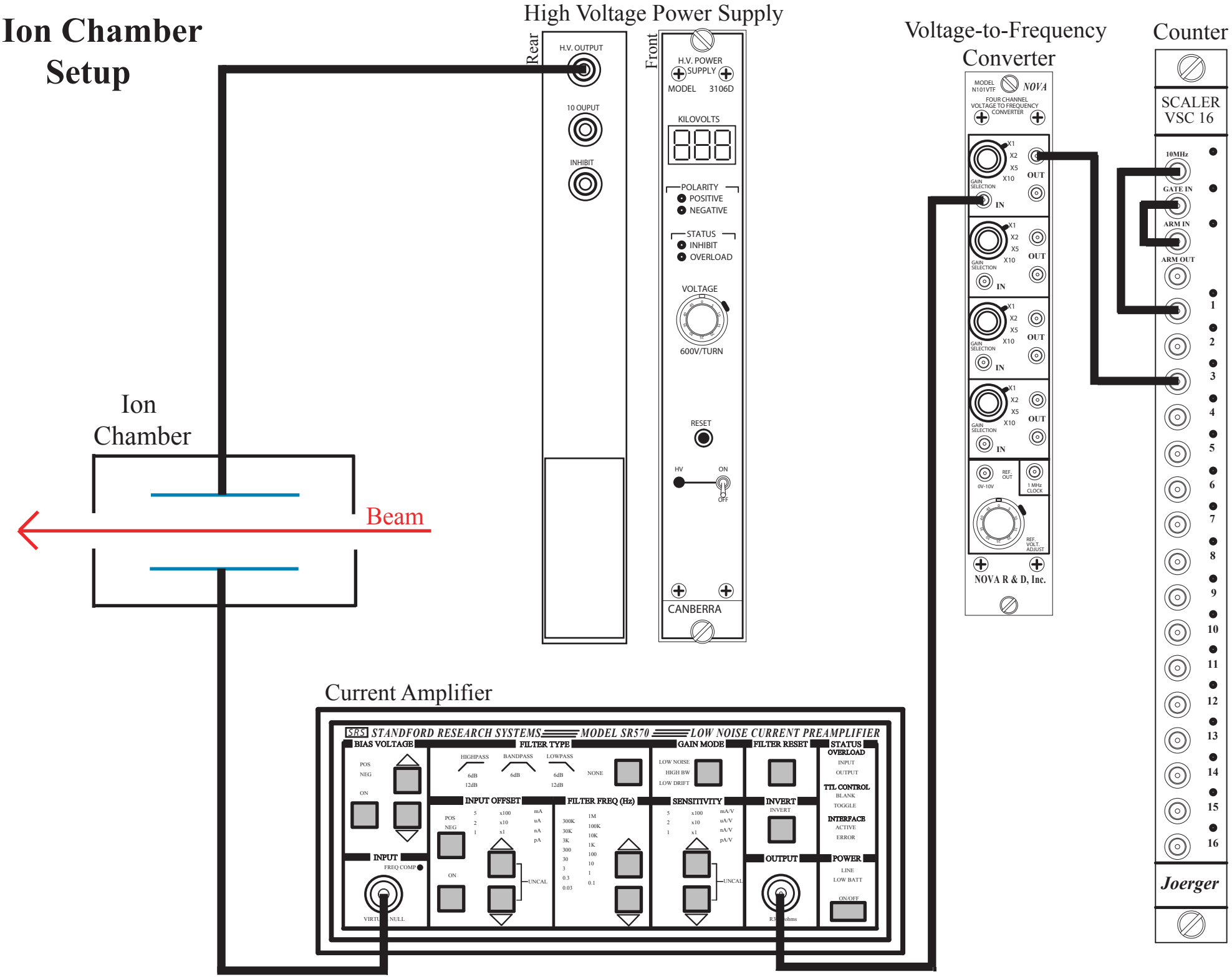Ion Chamber Setup